DTC	01-DD	Master Reset

DTC	01-E1	Voice Processing Device ON Error

DESCRIPTION

DTC No.	DTC Detection Condition	Trouble Area
01-DD *1	The device that should be the master has been disconnected after engine start	• Radio receiver power source circuit • AVC-LAN circuit between the radio receiver and the component which has stored this code • Radio receiver • Component which has stored this code
01-E1 *2	The AMP device records that the AMP output does not function even while the source device operates	

HINT:
*1: This code may be stored if the engine is started and the ignition switch is turned to START position again.
*2: Even if no fault is present, this trouble code may be stored depending on the battery condition or engine start voltage.

NOTICE:

- **Before starting troubleshooting, be sure to clear DTCs to erase codes stored due to the reasons described in the HINT above. Then, check for DTCs and troubleshoot according to the output DTCs.**
- **The radio receiver is the master unit.**
- **Be sure to clear and recheck DTCs after the inspection is completed to confirm that no DTCs are output.**

AV

INSPECTION PROCEDURE

NOTICE:
Be sure to read DESCRIPTION before performing the following procedures.

1	CHECK RADIO RECEIVER POWER SOURCE CIRCUIT

Refer to the radio receiver power source circuit (See page AV-87).
If the power source circuit is operating normally, proceed to the next step.

NEXT

2	INSPECT RADIO RECEIVER

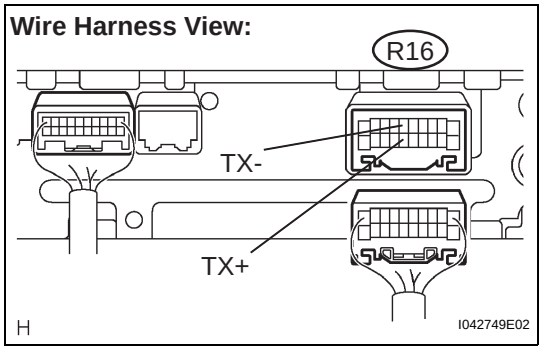

(a) Disconnect the radio receiver connector.
(b) Measure the resistance according to the value(s) in the table below.
Standard resistance

Tester Connection	Condition	Specified Condition
TX+ - TX-	Always	60 to 80 Ω

NG → **REPLACE RADIO RECEIVER**

cardiagn.com

OK

3	IDENTIFY THE COMPONENT WHICH HAS STORED THIS CODE

(a) Enter the diagnostic mode.

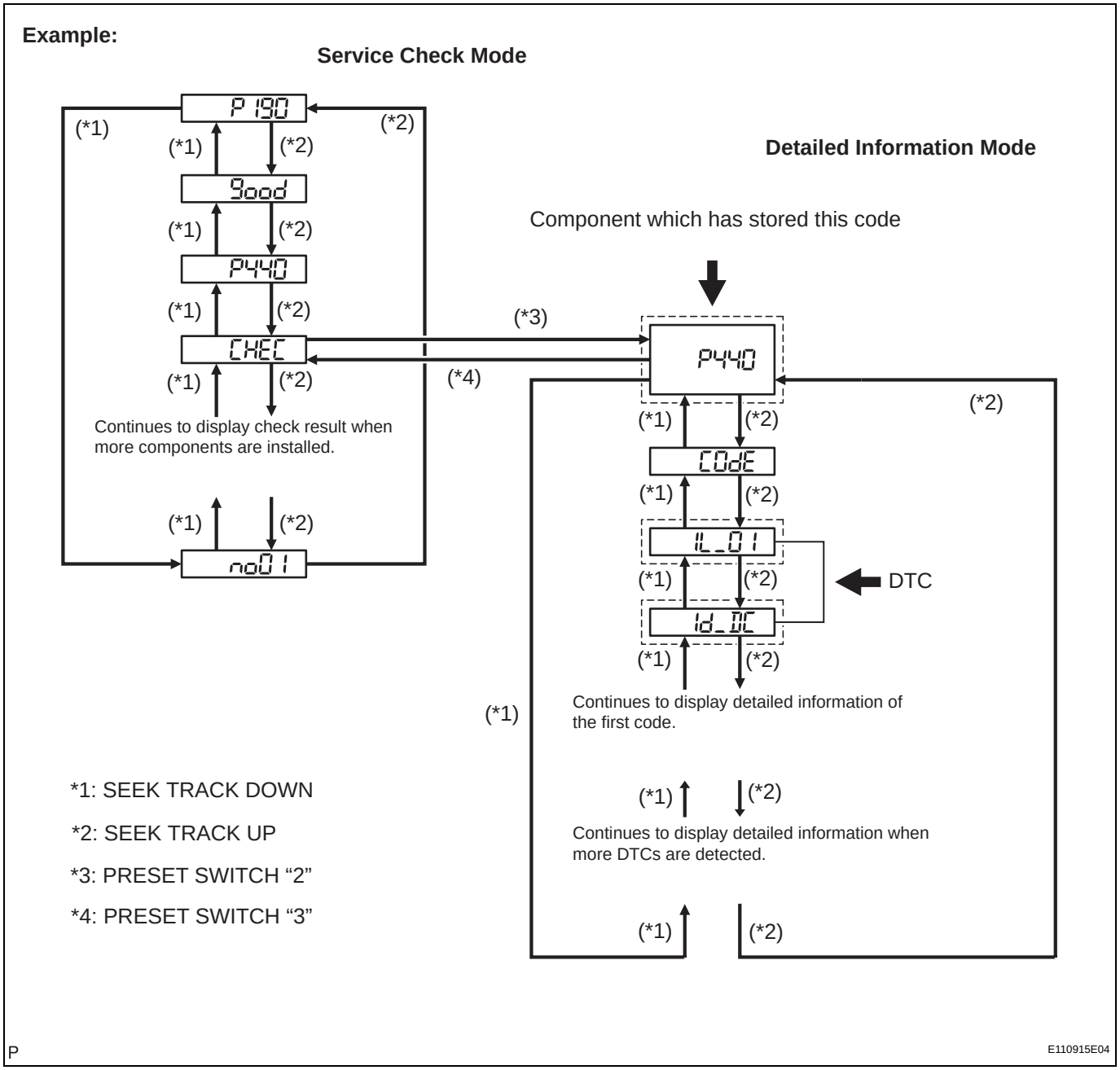

(b) Press the preset switch "3" to change to "Detailed Information Mode".

(c) Identify the component which has stored this code.

Component Table

Component	Physical address
Stereo component amplifier	440

AV
cardiagn.com

HINT:
- "440 (stereo component amplifier)" is the component which has stored this code in the example shown in the illustration.
- For details of the DTC display, refer to "DTC CHECK/ CLEAR" (See page AV-14).

NEXT

4	CHECK HARNESS AND CONNECTOR (RADIO RECEIVER - COMPONENT WHICH HAS STORED THIS CODE)

HINT:
For details of the connectors, refer to the "TERMINALS OF ECU" (See page AV-11).

(a) Referring to the AVC-LAN wiring diagram below, check the AVC-LAN circuit between the radio receiver and the component which has stored this code.
   (1) Disconnect all connectors between the radio receiver and the component which has stored this code.
   (2) Check for an open or short in the AVC-LAN circuit between the radio receiver and the component which has stored this code.
   OK:
   There is no open or short circuit.

AVC-LAN WIRING DIAGRAM

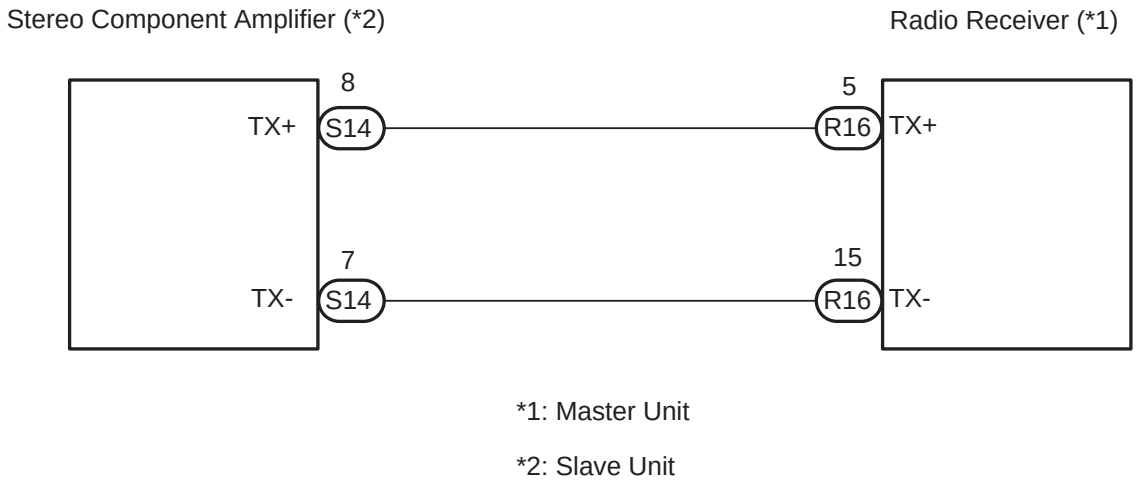

NG → **REPAIR OR REPLACE HARNESS OR CONNECTOR**

OK

cardiagn.com

5	**REPLACE RADIO RECEIVER**

(a) Replace the radio receiver with a normal one and check if the same problem occurs again.
OK:
Same problem does not occur.

NG → **REPLACE COMPONENT WHICH HAS STORED THIS CODE**

OK

END

cardiagn.com